REVISION RECORD				
REV	ECO	DESCRIPTION	DRFT	CHKD

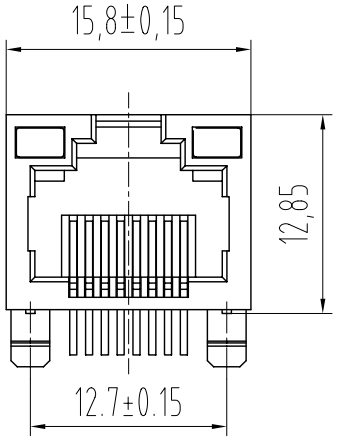

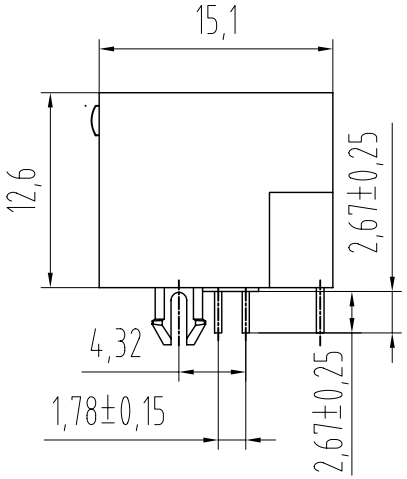

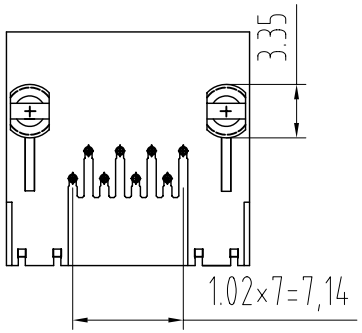

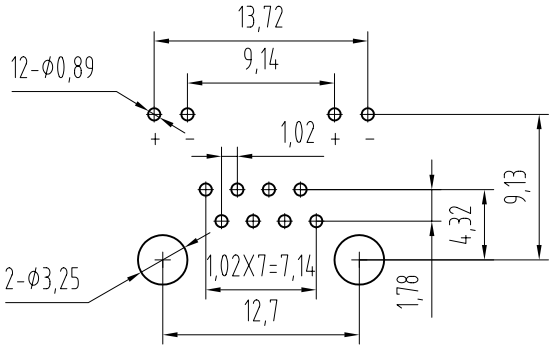

PC Board Layout

Component Side Shown

NOTES:

MATERIAL :

1.HOUSING MATERIAL	:GLASS FILLED POLYESTER UL94V-0.
2.CONTACT MATERIAL	:PHOSPHOR BRONZE Φ0.46mm.
3.PLATING	:GOLD PLATING OVER NICKEL.

ELECTRICAL:

1.VOLTAGE RATING	:125 VAC RMS.
2.CURRENT RATING	:1.5 AMP.
3.CONTACT RESISTANCE	:30 MILLIOHMS MAX.
4.INSULATION RESISTANCE	:500 MEGOHMS MIN @ 500V DC .
5.DIELECTRIC WITHSTANDING RESISTANCE	:1000V AC RMS 50Hz. 1MIN.

MECHANICAL:

1. DURRABILITY	:750 CYCLES MIN.
2.PCB RETENTION PRE-SOLDER	:1 LB MIN.

ENVIRONMENTAL:

1. STORAGE	: -40℃~+85℃
2. OPERATION	: 0°C TO 70°C

MM (INCH)	DFTO SHB	DATE 2007.05.03	℄库乐科技
TOLERANCES EXCEPT AS NOTED	CHKD LANBO	DATE 2007.05.03	
MM .0 ± 0.15 ± .00 ± 0.075 ± .000 ± 0.05 ±	MFO	DATE	TITLE 56 LED 8P8C
	APPVL	DATE	
	MATERIAL :		
ANGLES ± 0.5	Q.T'Y :		DRAWING NO. / PART NO. — SIZE A3 — REV 0
THIRD ANGLE PROJECTION	FINISH :		
	SCALE :		DO NOT SCALE DRAWING — SHEET X OF Y

DETACHED LISTS